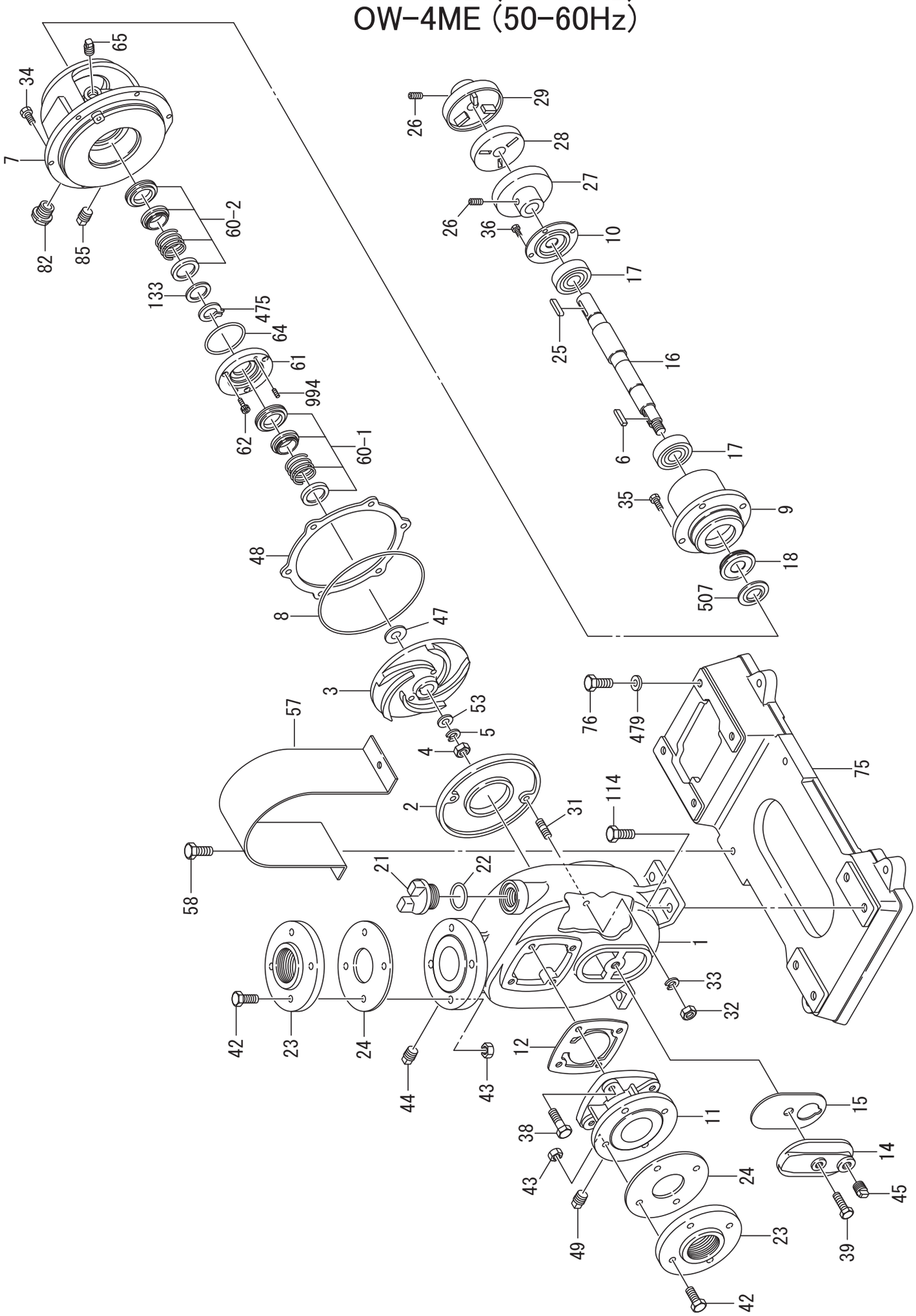OW-3ME (50-60Hz)
OW-4ME (50-60Hz)